700_2TRH_ANMB

Double Toilet Roll Holder in Antimicrobial

Dimensions: 47mmH x 279mmW x 77mmD

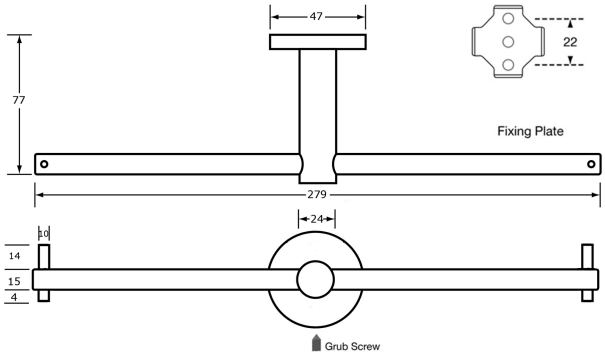

SPECIFICATION

Material	#304 Grade Stainless Steel, 15mmØ Solid Horizontal Bar
Finish	Antimicrobial Coated
Mounting	Surface Mount Security Concealed Fix
Capacity	Holds Two Standard Toilet Rolls

NOTES

- For Metlam Australia Care and Maintenance Guidelines, Installation Instructions, Product Specifications, and Warranty Details, please refer to the Product User Guide tab.

This unit is accessible compliant when installed in accordance with AS1428.1. guidelines.

For more in depth information, visit the product online: https://metlam.com.au/category/toilet-roll-dispensers/700_2TRH_ANMB

The photographs and line drawings of the products presented above are representational only. Metlam Australia Pty Ltd reserves the right to, and from time to time, make changes and improvements to design and dimensions.